Proceedings of the 42nd IEEE
Conference on Decision and Control
Maui, Hawaii USA, December 2003

On Partially Controlled Petri Nets that can be made Live by Supervision

Ramavarapu S. Sreenivas
Coordinated Science Laboratory &
Department of General Engineering
University of Illinois at Urbana-Champaign
Urbana, IL 61801
rsree@uiuc.edu

***Abstract*— The existence of a supervisory policy that enforces liveness in partially controlled *Petri nets* (PNs) is undecidable in general (cf. theorem 5.3 and corollary 5.2, [9]). However, there can be families of partially controlled PNs for which the existence of a supervisory policy that enforces liveness can be tested and synthesized. In this paper we present *choice-controlled* PNs as an example of such a family.**

Also, there can be specific examples of partially controlled PNs that be made live by supervision. Typically, this is shown by producing a supervisory policy that enforces liveness in the example at hand. There can be no generalization of this approach in light of theorem 5.3 and corollary 5.2 in reference [9]. However, for partially controlled *Free-Choice* PNs, there is a necessary and sufficient characterization of supervisory policies that enforce liveness. In specific, the necessary and sufficient condition for the existence of a supervisory policy that enforces liveness in a fully controlled *Free-Choice Petri Net* (FCPN) in reference [8] also holds for partially controlled FCPNs. This condition can be used to verify that a given supervisory policy does enforce liveness in a specific partially controlled FCPN.

I. Introduction

A large class of systems can be modeled as systems with independent, interacting, concurrent components. Typically, each independent process is split into several operations; the execution of each operation is conditioned on the satisfaction of a set of logical preconditions. Upon the execution of any such operation, a new set of logical conditions is created that inhibit the execution of some operations and enables the execution of others in the system. The supervisory control of such systems requires an external agent to regulate, or limit, the operations of each component so as to guarantee a common objective. In this paper we concern ourselves with a stronger version of deadlock avoidance called *liveness*. From any reachable state of a *live* system, it should be possible for any of the components to execute any of its operations, although not necessarily immediately.

Petri nets (PNs) [6], [7] are an ideal choice of the modeling of such systems as they allow easy representation of the logical preconditions as the marking, and the operations can be represented as transitions. A PN is said to be *live*, if from any reachable marking it is possible to fire any transition, although not necessarily immediately. A *Free-Choice Petri net* (FCPN) is a restricted class of Petri nets (PNs) where every arc from a place to a transition is either the unique output arc from that place, or, it is the unique input arc to the transition. FCPNs can model the flow of objects in production systems [1].

This work was supported in part by the National Science Foundation under grant ECS-00000938.

In this paper we consider *partially controlled* PNs where the external agent, the supervisor, can prevent only some (i.e. not all) transitions from firing. We concern ourselves with the synthesis of supervisory policies that use the marking of the PN to decide transitions that should be prevented from firing. In general, it is not possible to decide if a given partially controlled PN can be made live via supervision (cf. theorem 5.3 and corollary 5.2, [9]). In this paper we are interested in identifying families of partially controlled PNs can be be made live via supervision. We identify the family of *choice-controlled* PNs (and a refinement to this family), and we show that it is possible to decide if any (refined) choice-controlled PN can be made live via supervision. In case the choice-controlled PN can be made live, we present the minimally restrictive policy that enforces liveness.

In some cases we might be interested in showing that a specific instance of a partially controlled PN can be made live by supervision. Usually, this is done by showing that a particular supervisory policy enforces liveness in a specific instance. We consider this problem for partially controlled FCPNs, and we present a necessary and sufficient condition that characterizes supervisory policies that enforce liveness. This condition is useful in establishing the fact that a certain supervisory policy enforces liveness in a partially controlled FCPN.

Section II contains the notations and definitions used in this paper. The main results are presented in section IV after a review of the relevant results in the literature in section III. The paper concludes with section V, where the main results of the paper are presented in precis.

II. Notations and Definitions

A *Petri net* (PN) $N = (\Pi, T, \Phi, \mathbf{m}^0)$ is an ordered 4-tuple, where $\Pi = \{p_1, \ldots, p_n\}$ is a set of n *places*, $T = \{t_1, \ldots, t_m\}$ is a collection of m *transitions*, $\Phi \subseteq (\Pi \times T) \cup (T \times \Pi)$ is a set of *arcs*, $\mathbf{m}^0 : \Pi \to \mathcal{N}$ is the *initial marking function* (or the *initial marking*), and $\mathcal{N}$ is the set of non-negative integers. The state of a PN is given by the *marking* $\mathbf{m} : \Pi \to \mathcal{N}$ which indicates the distribution of *tokens* in each place. For a given marking $\mathbf{m}$, a transition $t \in T$ is said to be *enabled* if $\forall p \in^\bullet t, \mathbf{m}(p) \geq 1$, where

${}^{\bullet}x := \{y \mid (y,x) \in \Phi\}$. For a given marking $\mathbf{m}$ the set of enabled transitions is denoted by the symbol $T_e(N,\mathbf{m})$. An enabled transition $t \in T_e(N,\mathbf{m})$ can *fire*, which changes the marking $\mathbf{m}$ to $\widehat{\mathbf{m}}$ according to the equation

$$\widehat{\mathbf{m}}(p) = \mathbf{m}(p) - card(p^{\bullet} \cap \{t\}) + card({}^{\bullet}p \cap \{t\}),$$

where $x^{\bullet} := \{y \mid (x,y) \in \Phi\}$ and the symbol $card(\bullet)$ is used to denote the cardinality of the set argument.

A collection of places $P \subseteq \Pi$ is said to be a *siphon* (*trap*) if ${}^{\bullet}P \subseteq P^{\bullet}$ ($P^{\bullet} \subseteq {}^{\bullet}P$). A trap (siphon) P, is said to be *minimal* if $\nexists \widetilde{P} \subset P$, such that $\widetilde{P}^{\bullet} \subseteq {}^{\bullet}\widetilde{P}$ (${}^{\bullet}\widetilde{P} \subseteq \widetilde{P}^{\bullet}$).

A string of transitions $\omega = t_1 t_2 \cdots t_k$, where $t_i \in T$ ($i \in \{1,2,\ldots,k\}$) is said to be a *valid firing sequence* starting from the marking $\mathbf{m}$, if,

1) the transition t_1 is enabled under the marking $\mathbf{m}$, and
2) for $i \in \{1,2,\ldots,k-1\}$ the firing of the transition t_i produces a marking under which the transition t_{i+1} is enabled.

If $\mathbf{m}^1$ results from the firing of $\omega \in T^*$ starting from the initial marking $\mathbf{m}^0$, we represent it symbolically as $\mathbf{m}^0 \rightarrow \omega \rightarrow \mathbf{m}^1$. Given an initial marking $\mathbf{m}^0$ the set of *reachable markings* for $\mathbf{m}^0$ denoted by $\Re(N,\mathbf{m}^0)$, is defined as the set of markings generated by all valid firing sequences starting with marking $\mathbf{m}^0$ in the PN N.

A transition $t \in T$ is a PN $N = (\Pi, T, \Phi, \mathbf{m}^0)$ is *live*, if

$$\forall \mathbf{m}^i \in \Re(N,\mathbf{m}^0), \exists \mathbf{m}^j \in \Re(N,\mathbf{m}^i), \text{ such that } t \in T_e(N,\mathbf{m}^j).$$

A PN N is live if all its transitions are live. If transitions represent events that can be executed in a system, a live PN represents a system, where independent of the events that have been executed in the past, it is possible to execute all events in the future, although not necessarily immediately.

A PN $N = (\Pi, T, \Phi, \mathbf{m}^0)$ is a *Free-Choice* PN (FCPN) if

$$\forall p \in \Pi, card(p^{\bullet}) > 1 \Rightarrow {}^{\bullet}(p^{\bullet}) = \{p\}.$$

In other words, a PN is Free-Choice if and only if an arc from a place to a transition is either the unique output arc from that place, or, is the unique input arc to the transition. *Commoner's Liveness Theorem* (cf. [1], chapter 4, [7]) states an FCPN N is live if and only if every minimal siphon in N contains a minimal trap that has a non-empty token load.

We assume a subset of transitions, called *controllable transitions*, $T_c \subseteq T$ can be prevented from firing by an external agent called the supervisor. The set of *uncontrollable transitions*, denoted by $T_u \subseteq T$, is given by $T_u = T - T_c$. If $T_c = T$, then we say we have a *fully-controlled* PN, otherwise we have a partially controlled PN. The *fully-controlled equivalent* of a partially controlled PN $N = (\Pi, T, \Phi, \mathbf{m}^0)$, is a PN where $T_c = T$. That is, a full-controlled equivalent of a partially controlled PN essentially assumes all transitions are controllable.

A *supervisory policy* $\mathcal{P} : \mathcal{N}^n \rightarrow \{0,1\}^m$, is a total map that returns an m-dimensional binary vector for each reachable marking. The supervisory policy $\mathcal{P}$ permits the firing of transition t_i at marking $\mathbf{m}$, only if $\mathcal{P}(\mathbf{m})_i = 1$. If at a marking $\mathbf{m}$ all input places to a transition t_i contain a token, we say the transition t_i is *state-enabled* at $\mathbf{m}$. If $\mathcal{P}(\mathbf{m})_i = 1$, we say the transition t_i is *control-enabled* at $\mathbf{m}$. A transition has to be state-enabled and control-enabled before it can fire. The fact that uncontrollable transitions cannot be prevented from firing by the supervisory policy is captured by the requirement that $\forall \mathbf{m} \in \mathcal{N}^n, \mathcal{P}(\mathbf{m})_i = 1$, if $t_i \in T_u$. A string of transitions $\sigma = t_{j_1} t_{j_2} \cdots t_{j_k}$, where $t_{j_i} \in T (i \in \{1,2,\ldots,k\})$ is said to be a *valid firing string* starting from the marking $\mathbf{m}$, if,

1) the transition t_{j_1} is enabled at the marking $\mathbf{m}$, $\mathcal{P}(\mathbf{m})_{j_1} = 1$, and
2) for $i \in \{1,2,\ldots,k-1\}$ the firing of the transition t_{j_i} produces a marking $\widetilde{\mathbf{m}}$ at which the transition $t_{j_{i+1}}$ is enabled and $\mathcal{P}(\widetilde{\mathbf{m}})_{j_{i+1}} = 1$.

The set of reachable markings under the supervision of $\mathcal{P}$ in N from the initial marking $\mathbf{m}^0$ is denoted by $\Re(N,\mathbf{m}^0,\mathcal{P})$. A transition t_{j_i} is *live* under the supervision of $\mathcal{P}$ if

$$\forall \mathbf{m} \in \Re(N,\mathbf{m}^0,\mathcal{P}), \exists \widetilde{\mathbf{m}} \in \Re(N,\mathbf{m},\mathcal{P}) \text{ such that}$$

$$t_{j_i} \in T_e(\widetilde{\mathbf{m}}) \text{ and } \mathcal{P}(\widetilde{\mathbf{m}})_{j_i} = 1.$$

A supervisory policy $\mathcal{P}$ enforces liveness if all transitions in N are live under $\mathcal{P}$.

Given two supervisory policies $\mathcal{P}_1$ and $\mathcal{P}_2$ that enforce liveness in N, we say $\mathcal{P}_1$ is *less restrictive* than $\mathcal{P}_2$ if, $\forall \mathbf{m} \in \Re(N,\mathbf{m}^0,\mathcal{P}_1) \cap \Re(N,\mathbf{m}^0,\mathcal{P}_2)$, (i) $\mathcal{P}_1(\mathbf{m}) \geq \mathcal{P}_2(\mathbf{m})$, componentwise, and (ii) $\exists i \in \{1,2,\ldots,m\}$ such that $\mathcal{P}_1(\mathbf{m})_i > \mathcal{P}_2(\mathbf{m})_i$. A supervisory policy $\mathcal{P}$ that enforces liveness is said to be *minimally restrictive*, if there does not exist a supervisory policy that is less restrictive than $\mathcal{P}$. In this paper we consider the existence and synthesis of supervisory policies that enforce liveness in partially controlled PNs in general, and partially controlled FCPNs in particular.

III. Review of Previous Results

Reference [9] contains a necessary and sufficient condition for the existence of a supervisory policy that enforces liveness in an arbitrary PN. This condition is undecidable in general, but if all the transitions in a PN are controllable, or, if the PN is bounded the above mentioned test is decidable. Furthermore, it is possible to synthesize a least-restrictive policy that enforces liveness for these special cases (cf. figure 10, [9]). The computational cost of testing the existence, and synthesizing the least restrictive policy that enforces liveness can be prohibitive in general. Reference [8] contains an interpretation of *Commoner's Liveness Theorem* in the context of supervisory policies that enforce liveness in completely controlled FCPNs.

Theorem 4.1 in reference [11] states that if there is a supervisory policy that enforces liveness in a partially controlled FCPN $N = (\Pi, T, \Phi, \mathbf{m}^0)$, then there is a supervisory policy

that enforces liveness in the FCPN $\widehat{N} = (\Pi, T, \Phi, \widehat{\mathbf{m}}^0)$, where $\widehat{\mathbf{m}}^0 \geq \mathbf{m}^0$. This means the set of initial markings for which there is a policy that enforces liveness is right-closed. Every right-closed set can be represented by a finite-set of minimal elements, and reference [10] presents a minimally restrictive supervisory policy that enforces liveness in a partially controlled FCPN, provided the minimal elements of the above mentioned right-closed set are readily available, and the initial marking is greater than or equal to some minimal element. The issue of deciding if the right-closed set is non-empty for an arbitrary, partially controlled FCPN is still open to our knowledge. That is, given an arbitrary partially controllable FCPN, we cannot tell if there is a supervisory policy that enforces liveness.

Reference [3] concerns the issue of enforcing liveness in a subset of transitions using supervisory control that uses the linear-algebraic approach in reference [4]. The procedure presented in this reference is not guaranteed to halt in all instances, but when it does halt, it presents a supervisory policy that enforces liveness in the original PN. In a sense, one could say that the procedure for liveness enforcement in this reference implicitly identifies a class of PNs for which there is a supervisory policy that enforces liveness. Reference [5] identifies the class of S^2PGR^2-nets as a family of PNs that can be made live via under supervision under appropriate conditions. Reference [2] presents a monitor-based supervisory control procedure that enforces liveness in bounded PNs under appropriate conditions. In the sprit of theses references, the present paper also identifies a family of PNs that can be made live via supervision.

IV. Main Results

Observation 4.1 notes that there is a minimally restrictive supervisory policy that enforces liveness in a partially controlled PN if and only if there is a supervisory policy that enforces liveness in the PN.

Observation 4.1: (theorem 6.1, [9]) There is a minimally restrictive supervisory policy that enforces liveness in a partially controlled PN N if and only if there is a policy that enforces liveness in N.

Observation 4.2 notes that a minimally restrictive supervisory policy that enforces liveness in a completely controlled PN $N = (\Pi, T, \Phi, \mathbf{m}^0)$ does not disable a select set of transitions.

Observation 4.2: A minimally restrictive supervisory policy $\mathcal{P} : \mathcal{N}^n \rightarrow \{0,1\}^m$ that enforces liveness in a fully controlled PN $N = (\Pi, T, \Phi, \mathbf{m}^0)$ will never disable any transitions $t \in T$, such that $({}^\bullet t)^\bullet = \{t\}$.

Proof: From theorem 5.1 of reference [9], we know that if the minimally restrictive supervisory policy prevents the firing of a transition $t \in T$ at marking $\mathbf{m}^1$, and if $\mathbf{m}^1 \rightarrow t \rightarrow \mathbf{m}^2$, then at the marking $\mathbf{m}^2$ there cannot be $\omega_1, \omega_2 \in T^*$ such that (i) $\mathbf{m}^2 \rightarrow \omega_1 \rightarrow \mathbf{m}^3 \rightarrow \omega_2 \rightarrow \mathbf{m}^4$, (ii) $\mathbf{m}^4 \geq \mathbf{m}^3$, and (iii) all transitions in T appear at least once in ω_2.

Consider any firing string $\omega_4 \in T^*$ that is valid under the supervision of $\mathcal{P}$ at $\mathbf{m}^1$. We infer that $\exists \omega_5 \in pr(\omega_4), \exists \widehat{t} \in T$, such that $\mathbf{m}^1 \rightarrow \omega_5 \rightarrow \mathbf{m}^5, \mathbf{m}^2 \rightarrow \omega_5 \rightarrow \mathbf{m}^6, \omega_5 \widehat{t} \in pr(\omega_4)$ but $\widehat{t} \notin T_e(N, \mathbf{m}^6)$, where $pr(\bullet)$ denotes the prefix-set of the string argument. This would then imply that ${}^\bullet\widehat{t} \cap {}^\bullet t \neq \emptyset$ (if $\widehat{t} \neq t$), or, $\{t, \widehat{t}\} \subseteq ({}^\bullet t)^\bullet$. This is because if no such $\widehat{t} \neq t$ exists, then all firing strings that are valid at $\mathbf{m}^1$ are also valid at $\mathbf{m}^2$, and the minimally restrictive supervisory policy should have permitted the firing of t at $\mathbf{m}^1$. Hence the observation. ■

While the existence of a supervisory policy that enforces liveness in an arbitrary, partially controlled PN is undecidable [9], there are families of PNs for which it is possible to decide if there is a supervisory policy that enforces liveness. We now present one such family of PNs, called *choice-controlled* PNs. A PN $N = (\Pi, T, \Phi, \mathbf{m}^0)$ is said to be *choice-controlled* if $\forall p \in \Pi, card(p^\bullet) > 1 \Rightarrow p^\bullet \subseteq T_c$. We now present one of the main results of the paper.

Theorem 4.3: The existence of a supervisory policy that enforces liveness in a choice-controlled PN is decidable.

Proof: There is a supervisory policy that enforces liveness in a choice-controlled PN if and only if there is a similar policy for the fully-controlled version of the same PN.

The "only if" part of the claim follows directly from the the fact that any supervisory policy that enforces liveness in the choice-controlled PN also enforces liveness in the fully-controlled version of the same PN.

For the "if" part, we note that the minimally restrictive supervisory policy $\mathcal{P}$ that enforces liveness in the fully-controlled version, also enforces liveness in the original, choice-controlled PN. This is established by noting that a firing string is valid under the supervision of $\mathcal{P}$ in the fully-controlled version, if and only if it is valid under the supervision of $\mathcal{P}$ in the partially controlled PN. This is established by an induction argument on the length of the firing string that uses the fact that any control-disabled transition in the fully-controlled version of the PN is a controllable transition in the original, choice-controlled PN.

Since the existence of a supervisory policy that enforces liveness in fully controlled PNs is decidable [9], the result follows. ■

Figure 10 of reference [9] presents a procedure for the synthesis of a minimally restrictive supervisory policy that enforces liveness in a fully controlled PN. If there is a supervisory policy that enforces liveness in a choice-controlled PN, the minimally restrictive supervisory policy for its fully-controlled equivalent is also a minimally restrictive policy for the choice-controlled PN.

The requirement of choice-controlled PNs: $\forall p \in \Pi, card(p^\bullet) > 1 \Rightarrow p^\bullet \subseteq T_c$, can be relaxed. For instance, if $p \in \Pi$ in a PN $N = (\Pi, T, \Phi, \mathbf{m}^0)$, such that $card(p^\bullet) > 1$

and

$$\forall \mathbf{m}^1 \in \Re(N, \mathbf{m}^0), (\mathbf{m}^1(p) \geq 1) \Rightarrow (card(T_e(\mathbf{m}^1, N) \cap p^\bullet) \leq 1) \quad (1)$$

then we can relax the requirement that $p^\bullet \subseteq T_c$. The proof of observation 4.2, with appropriate changes, serves as a proof that a minimally restrictive supervisory policy that enforces liveness in N will not disable any output transition of p. It should be noted that the requirement in equation 1 can be tested in finite-time using the *coverability graph* (cf. page 930, [9]) of N. Using a proof similar to that of theorem 4.3, it can be shown that the existence of a supervisory policy for this relaxed family of choice-controlled PNs is also decidable.

The above result can be used to show that the fully uncontrollable PN shown in figure 1 is live. In graphical representations of controllable PNs a controllable (uncontrollable) transition is represented by a filled (unfilled) box. The PN shown in figure 1 contains no controllable transitions. We first note that $card(p_1^\bullet) = card(p_7^\bullet) = 2$, and $card(p_i^\bullet) = 1, \forall p_i \in \Pi - \{p_1, p_7\}$. Also, from the structure of the PN we know that the condition in equation 1 is holds for p_1 and p_7. So, from applying theorem 4.3 to the relaxed family defined above, we know that there is a supervisory policy that enforces liveness in this fully uncontrolled PN if and only there is a supervisory policy that enforces liveness in the fully-controlled equivalent. Since

$$\begin{pmatrix} 1 \\ 0 \\ 1 \\ 0 \\ 0 \\ 0 \\ 0 \\ 0 \\ 0 \\ 0 \\ 0 \\ 1 \\ 0 \end{pmatrix} \rightarrow t_2 t_4 t_7 t_8 t_9^2 t_1 t_3 t_6 t_2 t_4 t_7 t_8 t_9^2 t_1 t_3 t_5 \rightarrow \begin{pmatrix} 2 \\ 0 \\ 1 \\ 0 \\ 0 \\ 0 \\ 0 \\ 0 \\ 0 \\ 0 \\ 0 \\ 1 \\ 0 \end{pmatrix},$$

from theorem 5.1 of reference [9] we infer there is a supervisory policy that enforces liveness in the fully-controlled version of the PN shown in figure 1. From the adaptation of theorem 4.3 to the relaxed family of choice-controlled PNs, we infer that there is a supervisory policy that enforces liveness in the PN shown in figure 1. But since all transitions in this PN are uncontrollable, and we know that there is a supervisory policy that enforces liveness, we conclude that the PN shown in this figure is live.

We now turn our attention to a necessary and sufficient condition for the existence of a supervisory policy that enforces liveness in partially controlled FCPNs. If $\mathcal{M}(\mathbf{m}, t_i)$ denotes the collection of markings reachable from $\mathbf{m}$ under the supervision of $\mathcal{P}$, where t_i is state-enabled, reference [8] contains the following characterization of supervisory policies that enforce liveness in a completely controlled FCPN.

Theorem 4.4: [8] A supervisory policy $\mathcal{P} : \mathcal{N}^n \rightarrow \{0,1\}^m$, enforces liveness in an FCPN $N = (\Pi, T, \Phi, \mathbf{m}^0)$ if and only if the following conditions are satisfied:

1) $\forall \mathbf{m} \in \Re(N, \mathbf{m}^0, \mathcal{P}), \forall t_i \in T, \mathcal{M}(\mathbf{m}, t_i) \neq \emptyset \Rightarrow \exists \widehat{\mathbf{m}} \in \mathcal{M}(\mathbf{m}, t_i)$, such that $\mathcal{P}(\widehat{\mathbf{m}})_i = 1$.
2) $\forall \mathbf{m} \in \Re(N, \mathbf{m}^0, \mathcal{P}), \forall P \subseteq \Pi$, such that ${}^\bullet P \subseteq P^\bullet, \sum_{p \in P} \mathbf{m}(p) \neq 0$.

The proof of the above result in reference [8] holds, *mutatis mutandis*, for partially controlled FCPNs. We refrain from presenting the proof again in the interest of space. Condition 1 in the above theorem requires that the supervisory policy $\mathcal{P}$ disables a controllable transition t_i at a marking $\mathbf{m} \in \Re(N, \mathbf{m}^0, \mathcal{P})$ only if there is a marking $\widehat{\mathbf{m}} \in \Re(N, \mathbf{m}, \mathcal{P})$ where the t_i is state- and control-enabled. Condition 2 requires that the supervisory policy prevents the emptying of siphons. Figure 1 in reference [8] presents examples of fully controlled FCPNs that illustrate the need for the simultaneous satisfaction of the two conditions. These examples are also relevant to the case when the FCPN is partially controllable.

Theorem 4.4 can be used to show that specific examples of partially controlled FCPNs can be made live via supervision. For instance, consider the partially controlled FCPN shown in figure 2. The (controllable) uncontrollable transitions are represented by (filled) unfilled boxes (i.e. $T_c = \{t_1\}$, $T_u = \{t_2, t_3, t_4, t_5, t_6, t_7\}$). Theorem 4.4 can be used to show that the supervisory policy that permits the firing of t_1 when the there are two or more tokens in p_1 enforces liveness. The FCPN shown in figure 2 has two minimal siphons $P_1 = \{p_1, p_2, p_4\}$ and $P_2 = \{p_1, p_2, p_3, p_5\}$. There are no traps in this FCPN. Since p_1 is present in both siphons, it follows that the supervisory policy does not permit the emptying of siphons. Also, if the supervisory policy prevents the firing of t_1 there must be only one token in p_1. The firing of the string $t_2 t_4 t_5 t_7$ at this marking will result in a new marking where t_1 is both state- and control-enabled. From theorem 4.4 we can conclude that the policy enforce liveness in the partially controlled FCPN shown in figure 2 (which is not choice-controllable).

V. Conclusions

It is not possible to test the existence of a supervisory policy that enforces liveness in an arbitrary, partially controlled PN (cf. theorem 5.3 and corollary 5.2, [9]). So, in this paper we are after families of partially controlled Petri nets (PNs) for which we can decide if there is a supervisory policy that enforces liveness. We identified the family of *choice-controlled* PNs as one such family of partially controlled PNs. We then relaxed the requirements of choice-controlled PNs to obtain a relaxed family of choice-controlled PNs for

which it is possible to decide if a member of this class can be made live by supervision.

Finally, we turn to the problem of testing if a specific instance of a partially controlled PN can be made live by supervision. Restricting attention to the class of partially controlled Free-Choice PNs (FCPNs), we derive a necessary and sufficient condition for supervisory policies that enforce liveness. This condition finds use in situations where we are required to show that a specific supervisory policy enforces liveness in a partially controlled FCPN.

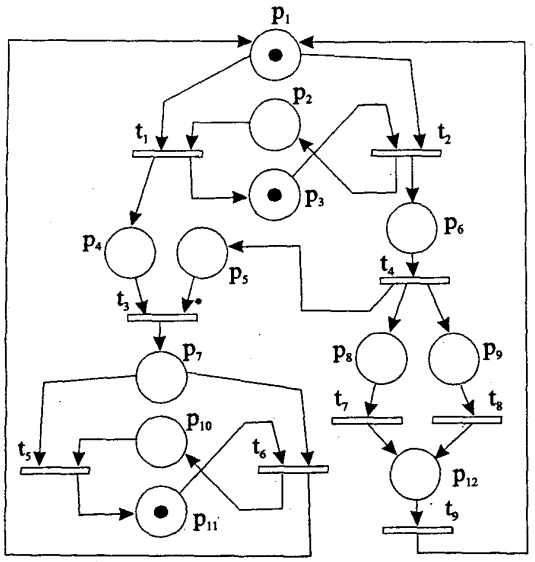

Fig. 1. A partially-controlled PN that is a member of the relaxed family of choice-controlled PNs.

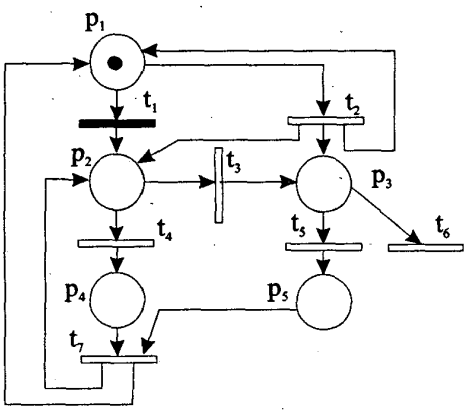

Fig. 2. A partially-controlled FCPN.

VI. REFERENCES

[1] M.H.T. Hack. Analysis of production schemata by Petri nets. Master's thesis, Massachusetts Institute of Technology, February 1972.

[2] K.X. He and M.D. Lemmon. Liveness-enforcing supervision of bounded ordinary petri nets using partial order methods. *IEEE Transactions on Automatic Control*, 47(7):1042–1055, July 2002.

[3] M.V. Iordache and P.J. Antsaklis. Generalized conditions for liveness enforcement and deadlock prevention in petri nets. Volume 2075, LNCS, Springer-Verlag, 2001. 184-203.

[4] J.O. Moody and P.J. Antsaklis. *Supervisory Control of Discrete Event Systems using Petri Nets*. Kluwer Academic Publishers, 1998.

[5] J. Park and S. Reveliotis. A polynomial-complexity deadlock avoidance policy for sequential resource allocation systems with multiple resource acquisitions and flexible routings. *Proceedings of the IEEE International Conference on Decision and Control*, pages 2663–2669, December 2000. Sydney, Australia.

[6] J.L. Peterson. *Petri net theory and the modeling of systems*. Prentice-Hall, Englewood Cliffs, NJ, 1981.

[7] W. Reisig. *Petri Nets*. Springer-Verlag, Berlin, 1985.

[8] R.S. Sreenivas. On Commoner's liveness theorem and supervisory policies that enforce liveness in free-choice petri. *Systems & Control Letters*, 31:41–48, 1997.

[9] R.S. Sreenivas. On the existence of supervisory policies that enforce liveness in discrete event dynamic systems modeled by controlled Petri nets. *IEEE Trans. on Automatic Control*, 42(7):928–945, July 1997.

[10] R.S. Sreenivas. On a minimally restrictive supervisory policy that enforces liveness in partially controlled free choice petri nets. *Proceedings of the Conference on Decision and Control (CDC-2000)*, December 2000. Sydney, Australia.

[11] R.S. Sreenivas. On partially controlled free choice petri nets. *Proceedings of the International Workshop on Discrete Event Systems (WODES-2000)*, August 2000. Ghent, Belgium.